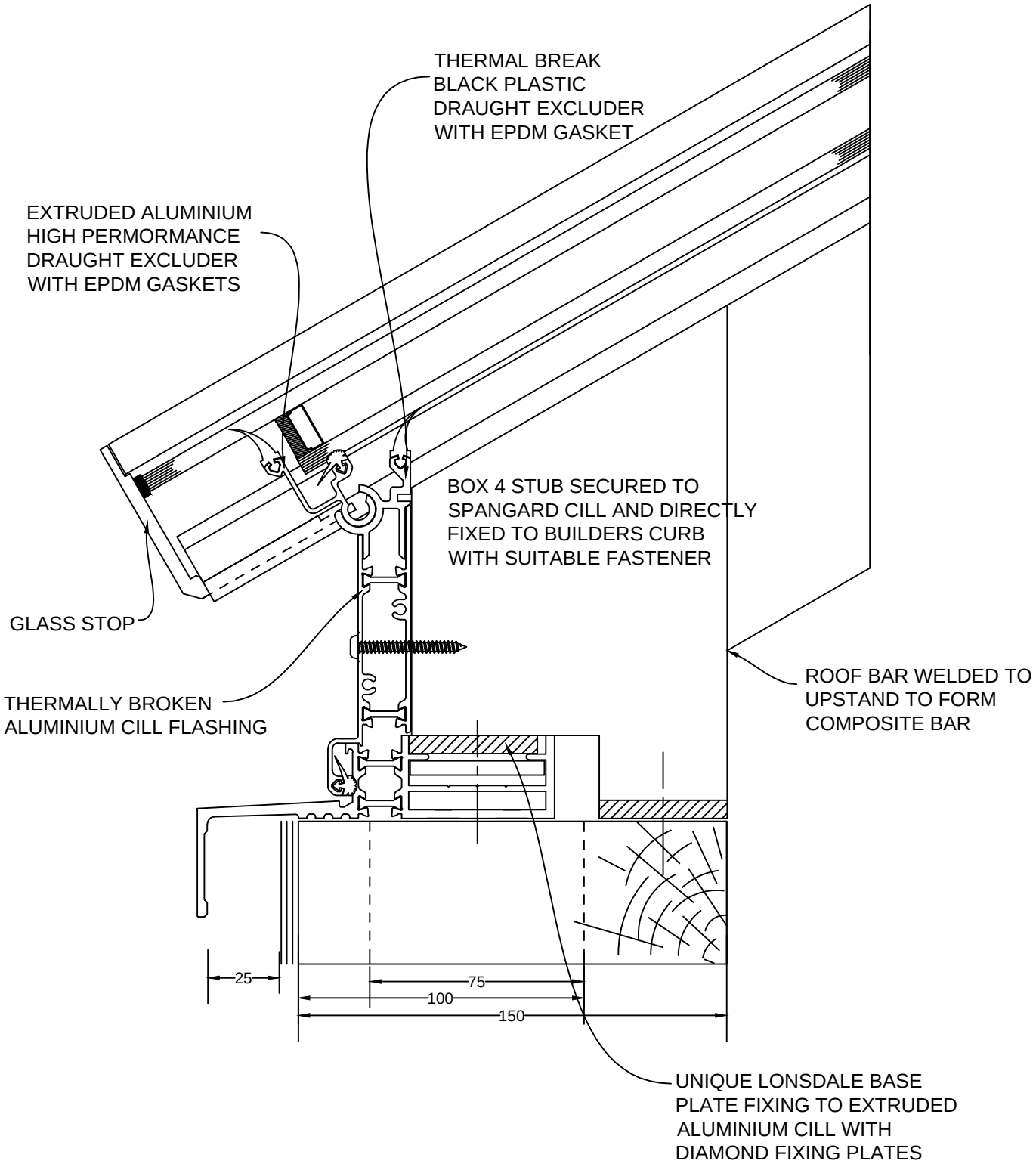CAD CODE SPA6Y
HEAVY DUTY TRUSS BAR
SCALE 1:2