LONSDALEMETAL Co. LTD
London N17 9QU
TEL: 020 8801 4221 FAX: 020 8801 1287
Email: info@lonsdalemetal.co.uk
www.lonsdalemetal.co.uk

DRAWING TITLE:

SAFEGARD TG50 RAFTER BAR TRIPLE GLAZED RIDGE DETAIL WITH ALUMINIUM FLASHING

SCALE: 1:2 AT A4

1. ALUMINIUM SNAP-ON COVER
2. PVC CO-EXTRUDED PRESSURE PLATE
3. STANDARD DGU 1.2 W*M²/K
4. PVC CO-EXTRUDED CARRIER RAIL THERMAL LINER
5. ALUMINIUM CARRIER RAIL
6. LOOSE LAY INSULATION (BY OTHERS)
7. 16 SWG ALUMINIUM PRESSING
8. TIMBER RAFTER (BY OTHERS)
9. TIMBER RIDGE (BY OTHERS)

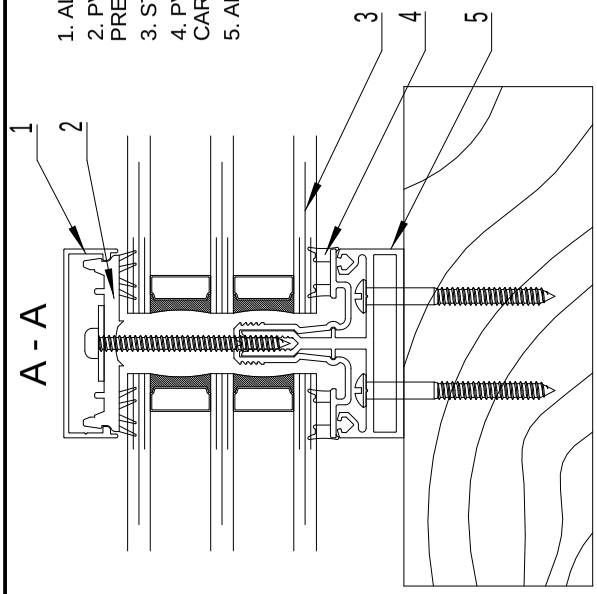

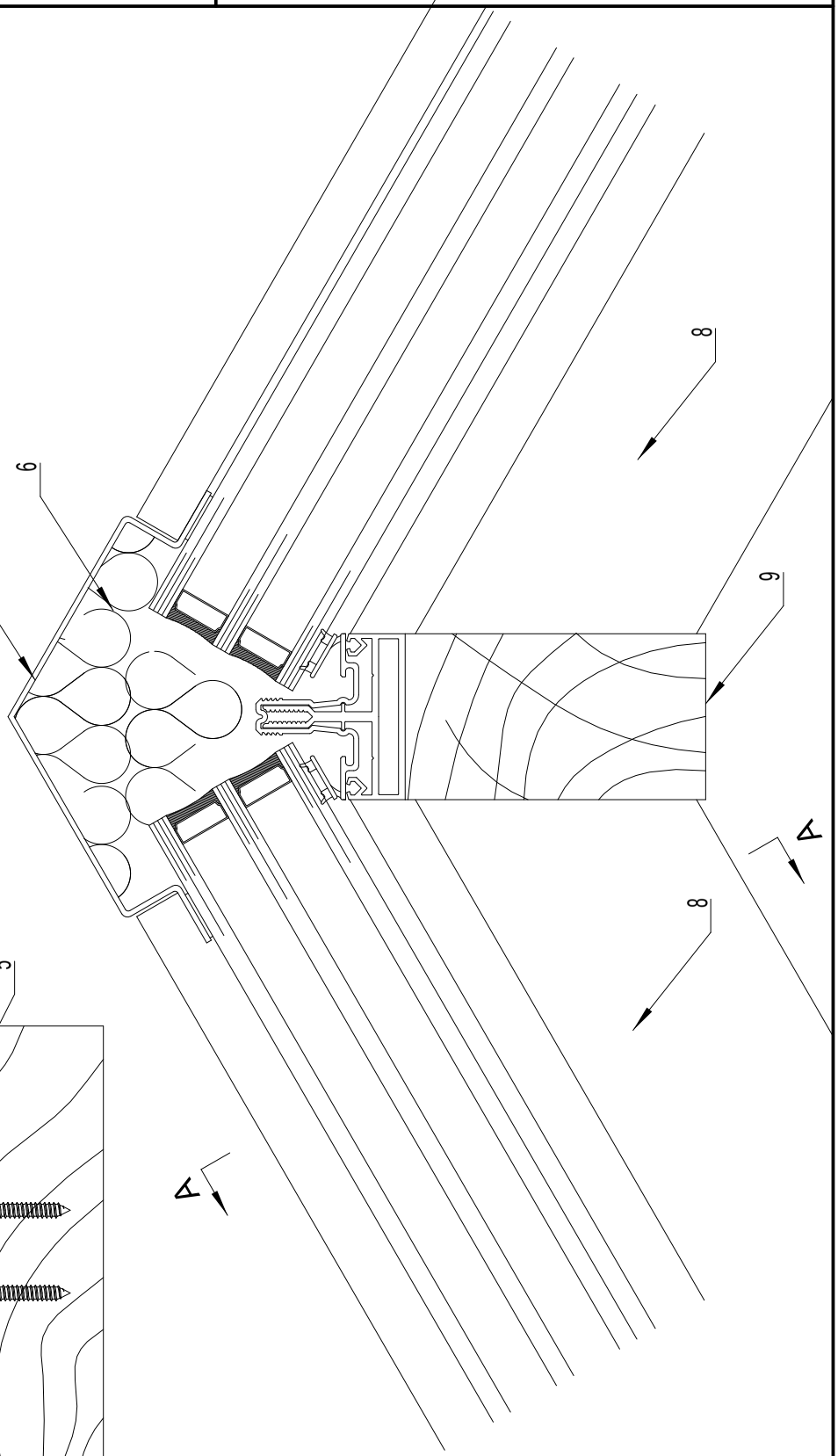

PROJECT:	REV	DATE		DRAWN	VM
TECHNICAL CATALOGUE DETAIL SAFEGARD TG50				DATE	07/2024
				DRG. No.	TG-61R